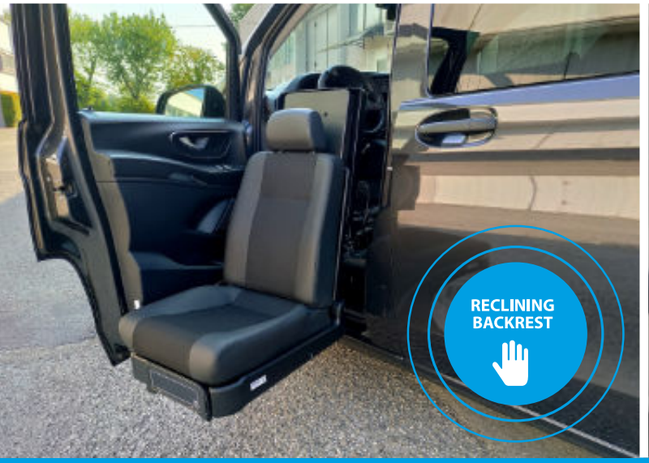

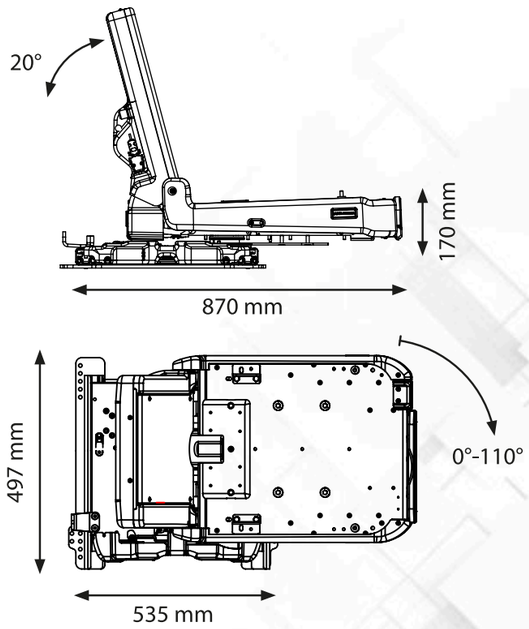

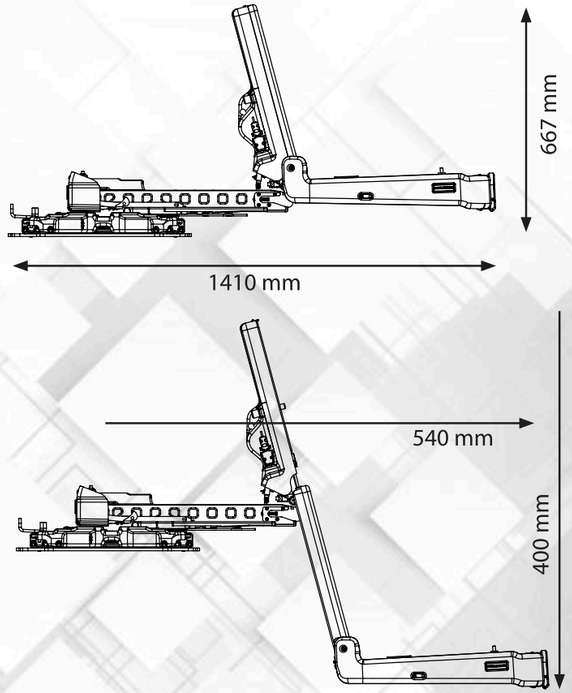

OUTGOING SWIVEL BASE - C400

The outgoing swivel base C400 is an automatic system that facilitates access to the vehicle for people with reduced or impaired mobility and for elderly people. It can be installed in the front or in the rear row, on the right or on left side of a vehicle according to the user's needs.

The device is built entirely in die-cast aluminum which offers maximum rigidity and strength with minimum weight. The extremely low weight makes it suitable for installation even on small vehicles. The movements, the mechanisms, the motors have been positioned to create a very compact device.

The thickness of the base under the seat is only 90 mm. Thanks to the remarkable stroke of the mechanisms: 270 mm internal movement, 110 ° rotation, 540 mm outgoing translation, 400 mm downward stroke, the device makes it suitable also for heavyset and tall people.

All handling adjustments are electronically programmable to offer the most comfortable position in the transport. The exclusivity of this device is the adjustment of the backrest which is implemented by a release after closing the door and allows to recline it to offer maximum comfort.

It comes complete with footrest, fine finishes with abs fairings. The base can be equipped with a tilting mechanism to allow the seat and the transported person to enter or exit the vehicle easily in the case of particularly tall people or openings with reduced heights. In the standard version C400 is supplied with a flush keypad. A wireless keypad is available upon request.

New: a version with the THIRD PROGRAMMABLE AXIS is available, a function that allows to draw ideal curves for the exit and the return of the device on the DRIVE SIDE, reducing times and maneuvering spaces.
This function significantly increases the percentage of vehicles on which this device can be installed.